FLY-104

- Fly-104 stadium seat is mounted with sleeper (rail system). The sleepers are mounted at the height of the riser and optionally on the riser (step front) or on the floor. Thanks to the sleeper system, the seats can be fixed easily and quickly. Thanks to the sleeper system, the seats can be fixed easily and quickly. Thanks to this system, it is possible to adapt the space to the desired capacity, to adjust the distance between the seats or to make possible product and layout arrangements easily. Thanks to its center of gravity system, Fly-104 stadium seat is maintenance-free throughout its lifetime.

- The plastic seat and back used in the seats are manufactured as PP or PE by blowing method. Thanks to the internal metal construction in the seat font, the durability of the product has been maximized. Requested applications can be made in the logo and advertising area on the back of the seat. Fly-104 stadium seat has armrest with PP injection cup holder. Armrests can optionally be manufactured in common or as two pieces for each stadium seat. Armrests are connected to the sleeper system. The numbering area under the seat font and the optional sleeper row number allow users to find their places more easily and quickly. Thanks to the thin structure of the seat, it is possible to relieve the circulation on the steps and increase the capacity.

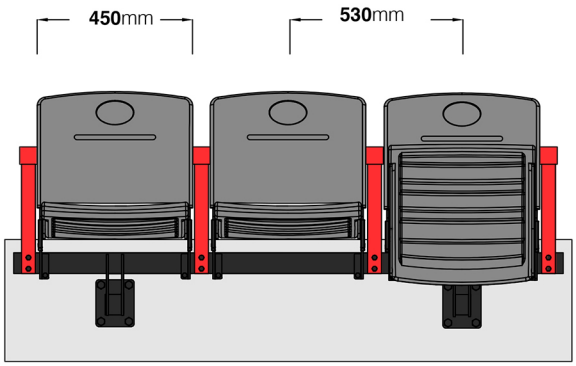

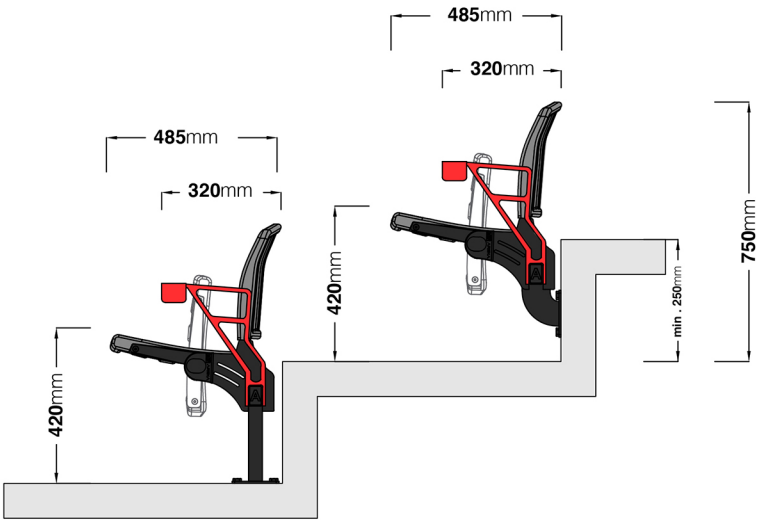

FLY-104

MiR ARENA

TECHNICAL SPECIFICATIONS:

- Produced from PE or PP.
- UV added in accordance with EN ISO 4892-2.
- Corrosion resistant in accordance with EN ISO 9227.
- Compliance with the EN ISO 11925-2 and 13501-1/E class with non-combustibility additive.
- The highest resistance to hooliganism in accordance with EN ISO 13200-4.
- Tip-up mechanism that works with the center of gravity system.
- The metal parts of the seats are designed and manufactured from 6 mm one-piece sheet metal without welding, by laser cutting and bending in press molds.
- The rail system, which seats are firmly attached to, provides the opportunity slide the seats to right and left, and the seats can be easily replaced with new ones in the future.
- The rail system provides the possibility of mounting on the floor or on the riser.
- The plastic weight of the seats is 3.250 gr and the total is 9.540 gr.
- Logo and advertising area on the backrest.
- Seat numbering area under the seatrest.
- PP cup holder armrests on the seats.

ACCESSORIES:

- Backrest logo application.
- Seat number tag.
- Mechanism covers.
- Rail system row tag.

Quick Acces